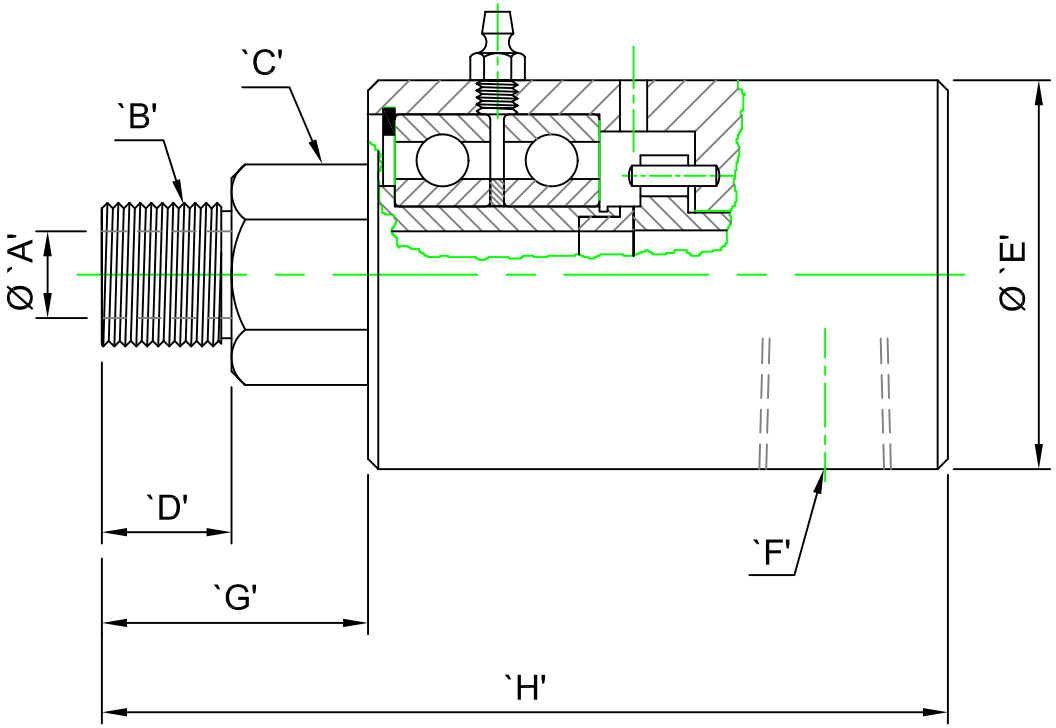

R - 300 ROTARY UNION

Rotor resting between two ball bearing ensuring long life , to sealing faces which are micro - lapped to optical flatness .

OPERATING DATA :-

Max. Speed - 3500 RPM.
Max. Temperature - 120° C
Max. Air Pressure - 10 Kg. / Cm^2.
Max. Hydraulic Pressure - 35 Kg. / Cm^2.
Media - Air and Hydraulic Service.