R - 202 ROTARY UNION

Ø'A' ROTOR HOLE	'C' THREAD ROTOR BSP	Ø'E'	'F' BSPT	'H' BSPT	'I' BSP	'J'	'K'	'L'	'M' BSPT	'N' BSP	'O' BSP	'P'	Ø'Q'	Ø'R'	'S'	'T'	Ø'U'	'V'
12.7	1/2" RH 1/2" LH	57	1/2"	1/2"	3/8"	35	145	180	3/8"	1/8	1/2"	171						
19	3/4" RH 3/4" LH Q.C.	79	3/4"	3/4"	1/2"	38	158	197	1/2"	1/4"	3/8"	198	30	28	8	13	75	55
25.4	1" RH 1" LH Q.C.	85	1"	1"	3/8"	43.2	186	235	3/4"	3/8"	1/2"	223	35	31.8	8	13	80	60
32	1 1/4" RH 1 1/4" LH Q.C.	89	1 1/4"	1 1/4"	1/2"	54	220	277	1"	1/2"	1/2"	272	41	38.1	12.7	12.5	100	75
37	1 1/2" RH 1 1/2" LH Q.C.	115	1 1/2"	1 1/2"	3/4"	59	252	307	1 1/4"	3/4"	3/4"	302	50	45	12.7	15.5	105	80
46	2" RH 2" LH Q.C.	128	2"	2"	1"	64.5	277	343	1 1/2"	3/4"	3/4"	337	59	56	17	15.5	130	100
63	2 1/2" 2 1/2" LH Q.C.	157.5	2 1/2"	2 1/2"	1"	88.5	325.5	4'12	2"	1"	1"	398.5	80	75	20	16	150	120
75	3" RH 3" LH Q.C.	169	3"	3"	1 1/4"	91	376	443	2 1/2"	1"	1 1/2"	458	92.08	88.11	26.57	18.2	180	145
95	4" RH 4" LH Q.C.	210	4"	3"	2"	87.35	420	592	3"	3"	1 1/2"	537	113	109	26.57	21	195	190

SIPHON TUBE DIMENSIONS OF DFFS & DFRS ROTARY UNIONS

TUBE DIM.	3/8"	1/2"	3/4"	1"	1-1/4"	1-1/2"	2"	2-1/2"	3"	3-1/2"	4"
I.D.	3	6	6.35	10	15	20	25	32	40	50	50
O.D.	6	10	13.5	17.5	21.3	26.9	33.7	42.4	48.3	60.3	60.3
'X' BSP	M6	1/8"	1/4"	3/8"	1/2"	3/4"	1"	1 1/4"	1 1/2"	2"	2"
Ø'Y'	-	8.9	12.6	16.4	18.65	25.3	31.85	41.85	47.8	59.8	59.8
Ø'Z'	-	32	32	45	60	66	75	86	96	98	110

R - 202 ROTARY UNION

High Temperature Service Union. Rotor and Outer Body made of temperature resistant steels. Optically flat lapped Tungsten Carbide Seals are held by 99.99% pure graphite bushing to withstand very high temperature of the Thermic fluids. Available in MONO FLOW, DUO FLOW With FIXED SIPHON and ROTATING SIPHON.

OPERATING DATA :-
Max. Speed - 250 RPM.
Max. Temperature - 350° C
Max. Pressure - 5 Kg./Cm.^{2}
Media - Thermic fluid

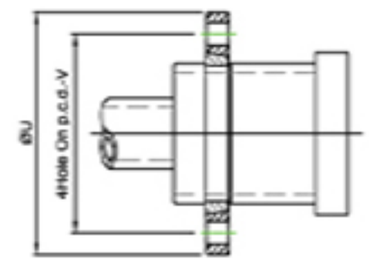

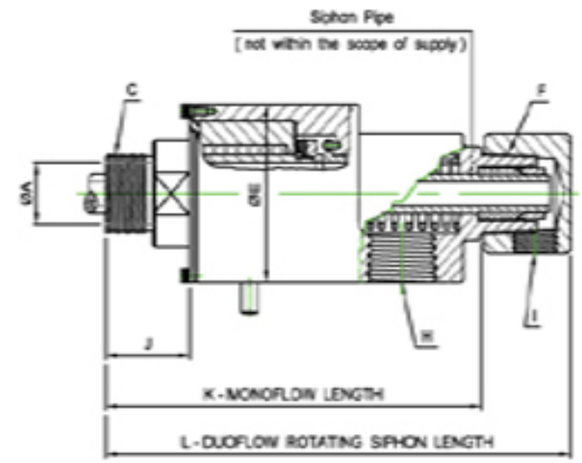

MOUNTING ARRANGEMENT
FOR QUICK CONNECT ROTOR

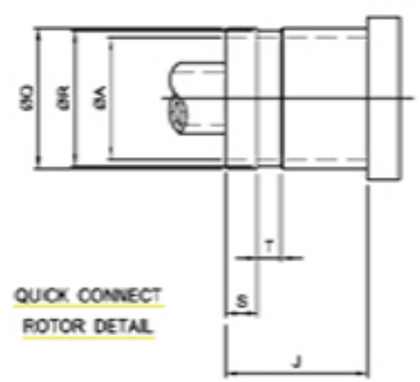
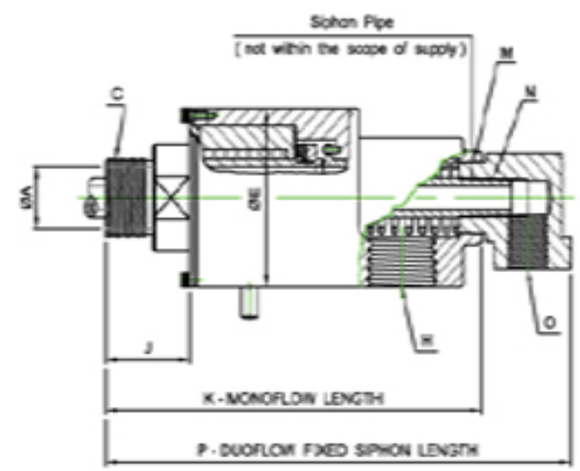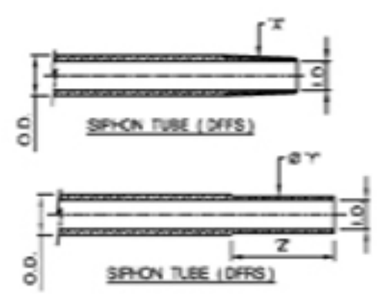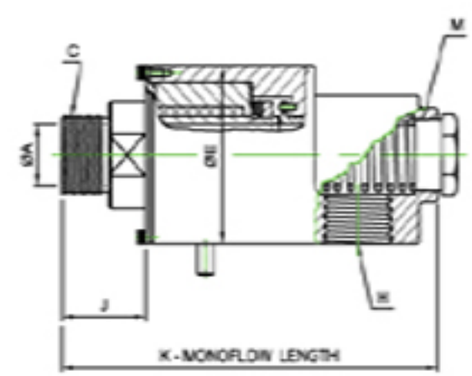
QUICK CONNECT
ROTOR DETAIL